Pamex® Locks

Vertical Rod Exit Device

E8000V
Vertical Rod

WARRANTY

- **Ten years mechanical warranty**
- **Five years finish warranty**

ADA

CODE COMPLIANCE

- **ANSI A156.3, Grade 2**
- **UL listed for Panic and UL10C, UBC 7-2-1997 codes**

FEATURES & OPTIONS

Door Height
For all doors up to 7'0" or 8'0" high

Door Width
For all doors up to 36" wide

Stile
4-1/4" minimum

Material
Push bar is made of extruded anodize aluminum and spring is made of stainless steel

Dogging
1/4" turn, hex key dogging (non-fire rated only, E8000V)

Strike (Top & Bottom)
Top Strike: for 1/2" stop, plus shim

Top Latch
Latchbolt: 3/4" throw, stainless steel
Deadlatch: 1/2" throw, steel bolt

Bottom Latch
Latchbolt: 3/4" throw, stainless steel

Mounting
Furnished standard with sheet metal & machine screws

Backset
2-3/4" standard

Handing
Non-handed

Projection
2-1/2" maximum projection, 1-7/8" when depressed

Operation
Exit by slight pressure on any point on the push bar at all time

FINISHES

- ☐ **Aluminum (Painted)**
- ☐ **Dark Bronze (Painted)**
- ☐ **Polished Brass (Painted)**

Available Trims

Lever Trim

Knob Trim

Rim Cylinder Single Pull

Rim Cylinder Double Pull

Cover Plate

Pull Plate

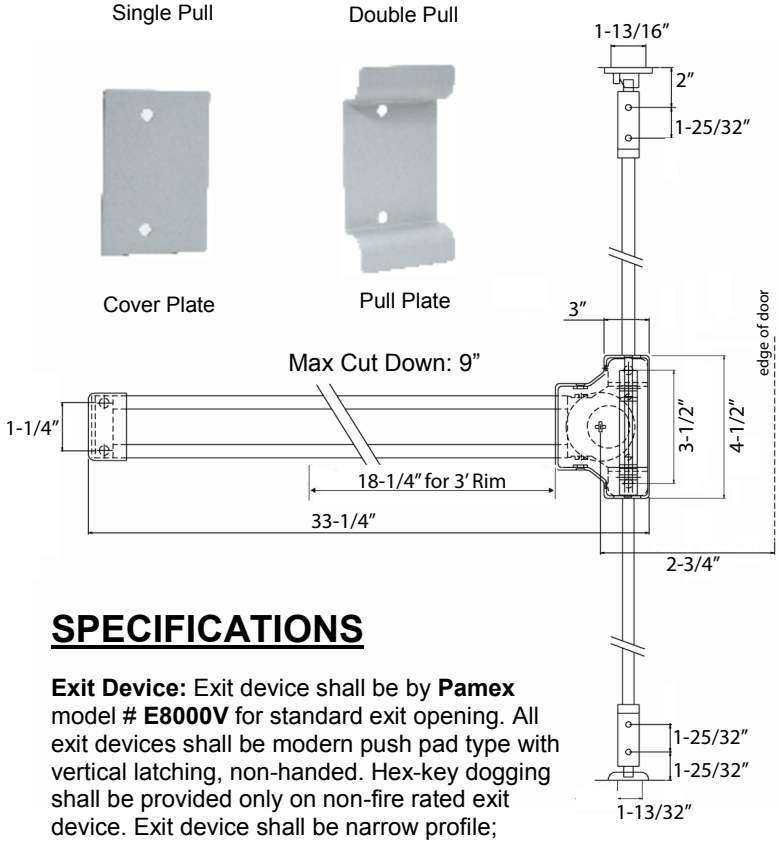

SPECIFICATIONS

Exit Device: Exit device shall be by **Pamex** model **# E8000V** for standard exit opening. All exit devices shall be modern push pad type with vertical latching, non-handed. Hex-key dogging shall be provided only on non-fire rated exit device. Exit device shall be narrow profile; projecting only 2-1/4" from the surface of the door.

EF8000V
Vertical Rod

WARRANTY

- **Ten years mechanical warranty**
- **Five years finish warranty**

ADA

CODE COMPLIANCE

- **ANSI A156.3, Grade 2**
- **UL listed for Panic and UL10C, UBC 7-2-1997 codes**
- **UL 1-1/2 Hour Fire Rated**

FEATURES & OPTIONS

Fire Rated Vertical Rod Exit Device

Door Height
For all doors up to 7'0" or 8'0" high

Door Width
For all doors up to 36" wide

Stile
4-1/4" minimum

Material
Push bar is made of extruded anodize aluminum and spring is made of stainless steel

Strike (Top & Bottom)
Top Strike: for 1/2" stop, plus shim

Top Latch
Latchbolt: 3/4" throw, stainless steel
Deadlatch: 1/2" throw, steel bolt

Bottom Latch
Latchbolt: ¾" throw, stainless steel

Mounting
Furnished standard with sheet metal & machine screws

Backset
2-3/4" standard

Handing
Non-handed

Projection
2-1/2" maximum projection, 1-7/8" when depressed

Operation
Exit by slight pressure on any point on the push bar at all time

FINISHES

- ☐ **Aluminum (Painted)**
- ☐ **Dark Bronze (Painted)**
- ☐ **Polished Brass (Painted)**

Available Trims

Lever Trim

Knob Trim

Rim Cylinder Single Pull

Rim Cylinder Double Pull

Cover Plate

Pull Plate

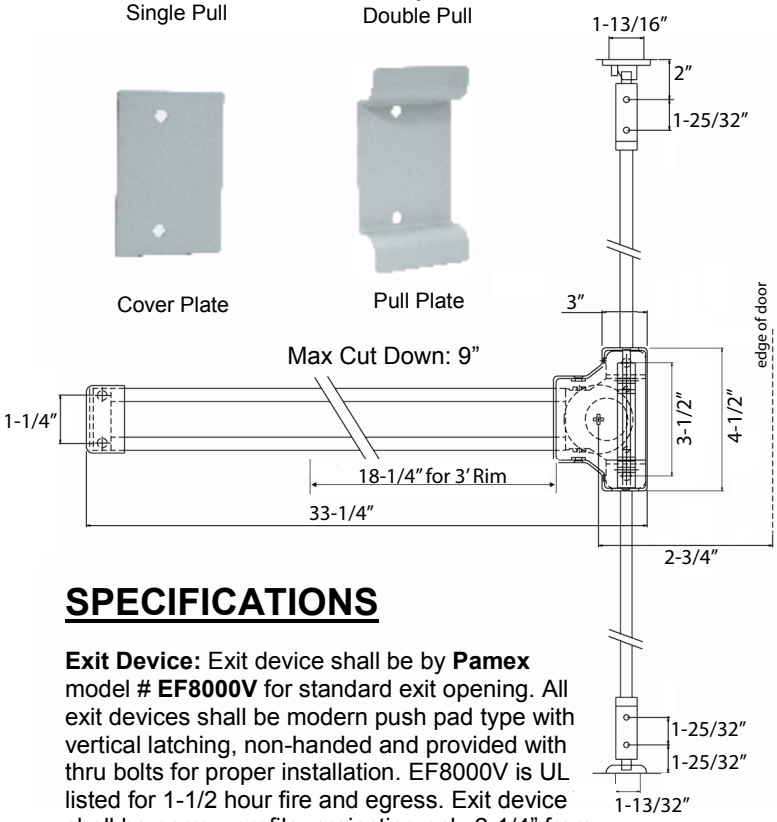

SPECIFICATIONS

Exit Device: Exit device shall be by **Pamex** model # **EF8000V** for standard exit opening. All exit devices shall be modern push pad type with vertical latching, non-handed and provided with thru bolts for proper installation. EF8000V is UL listed for 1-1/2 hour fire and egress. Exit device shall be narrow profile; projecting only 2-1/4" from the surface of the door.