Installation Manual

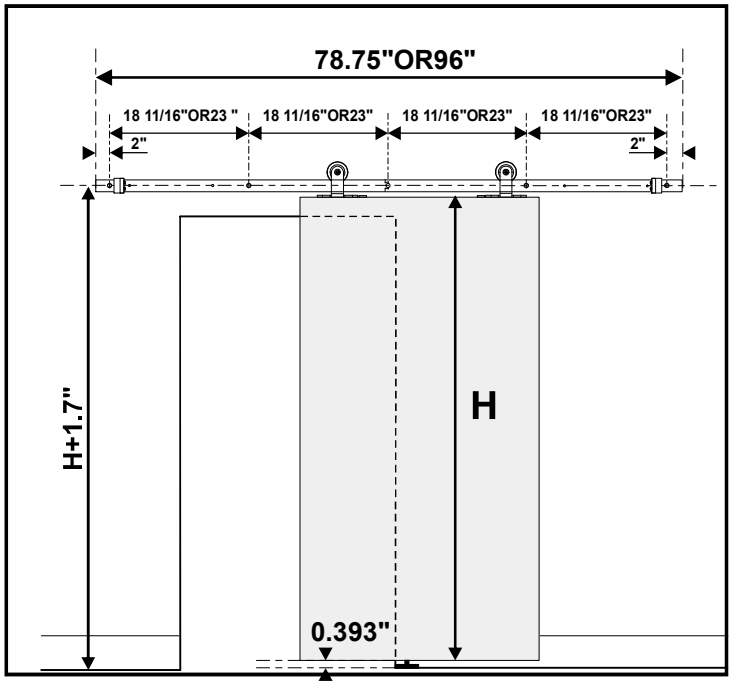

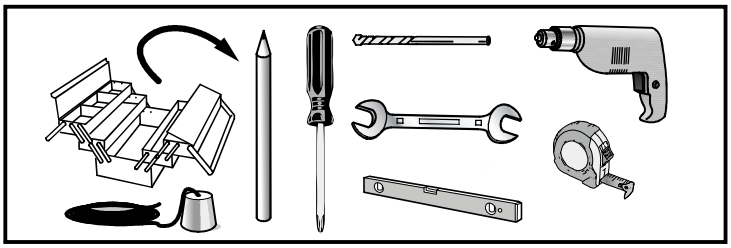

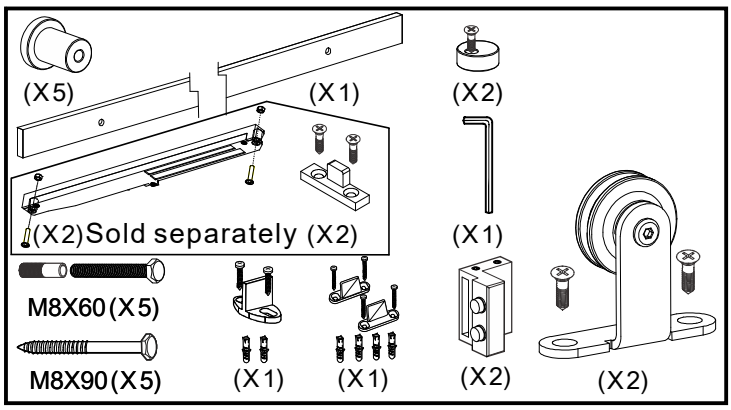

1

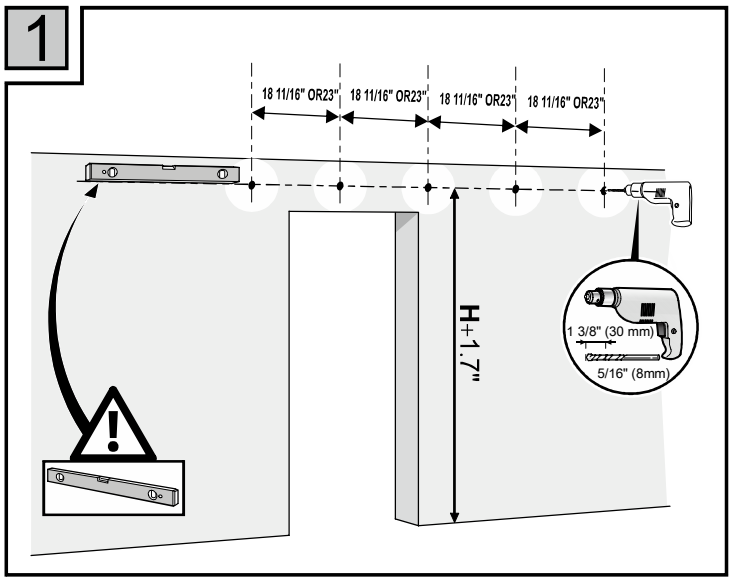

2

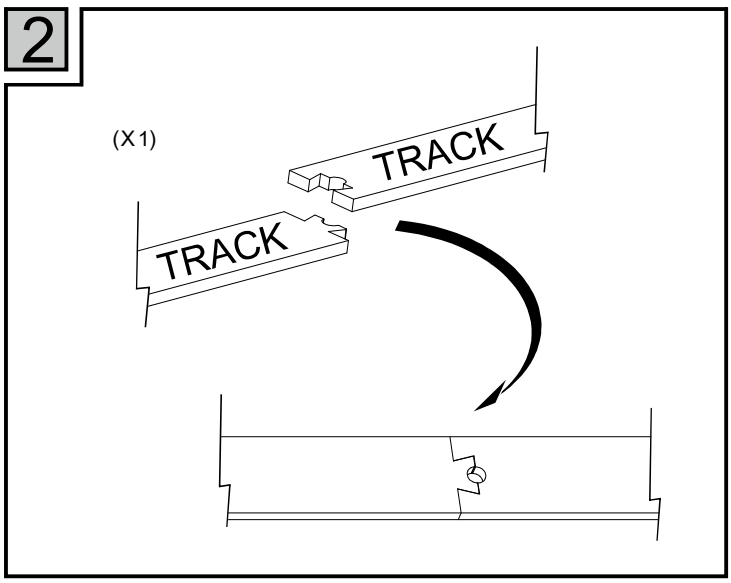

3

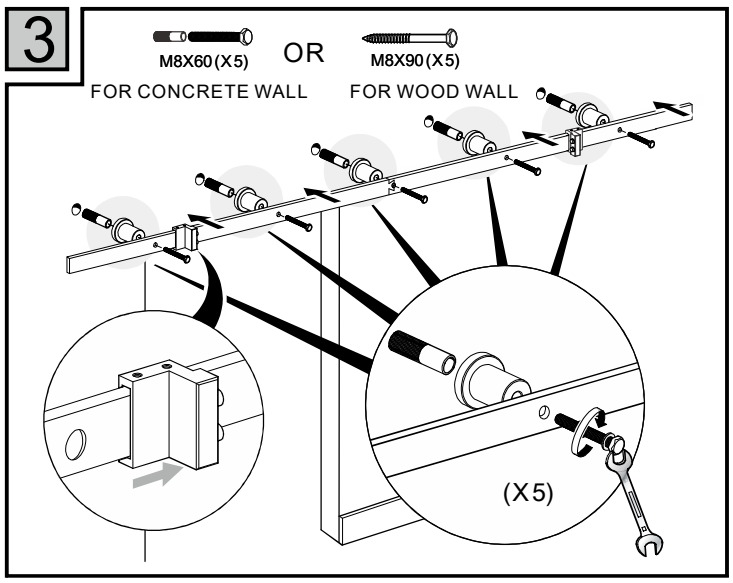

4

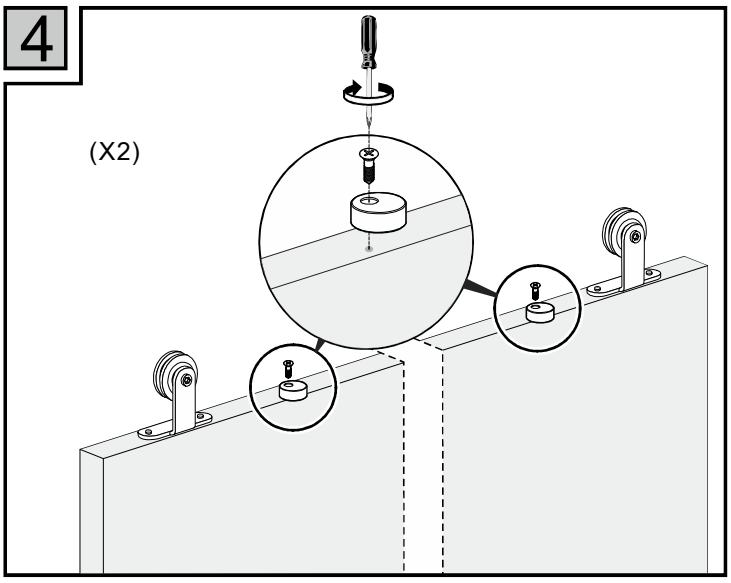

5

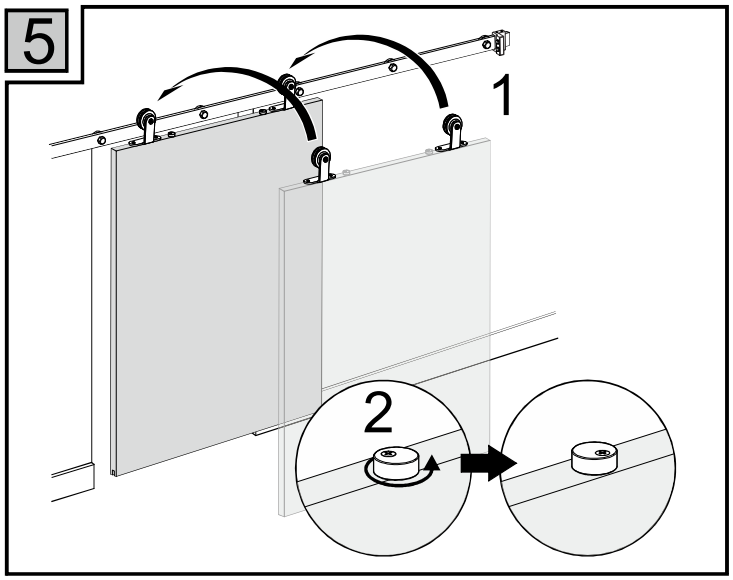
1
2

6

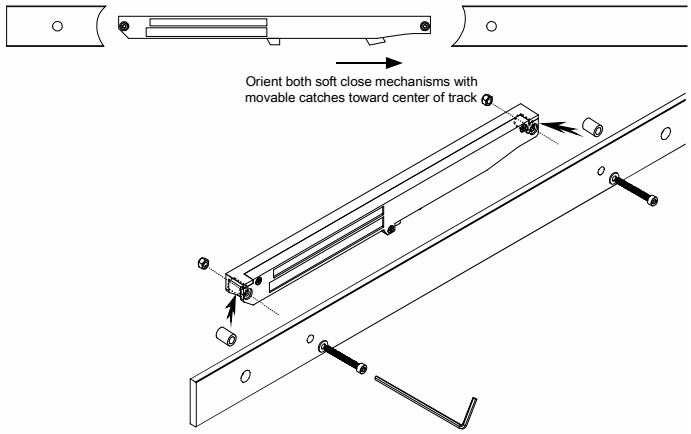
Orient both soft close mechanisms with
movable catches toward center of track

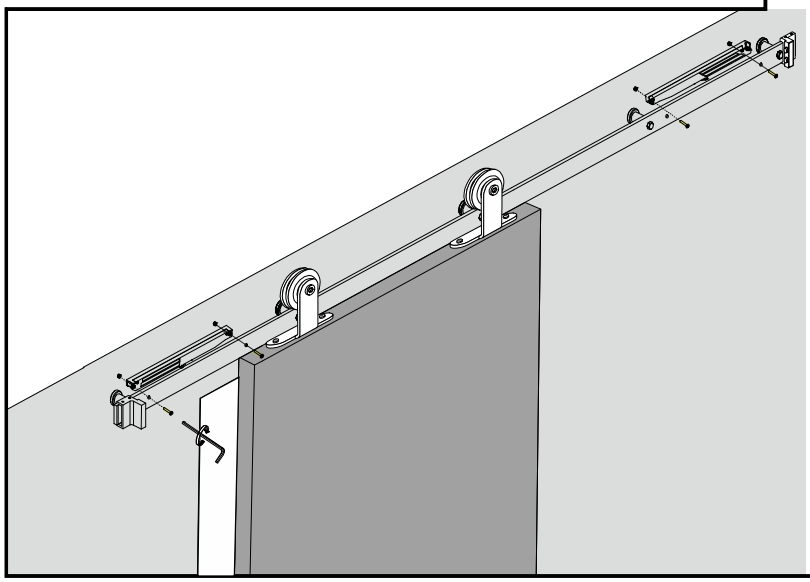

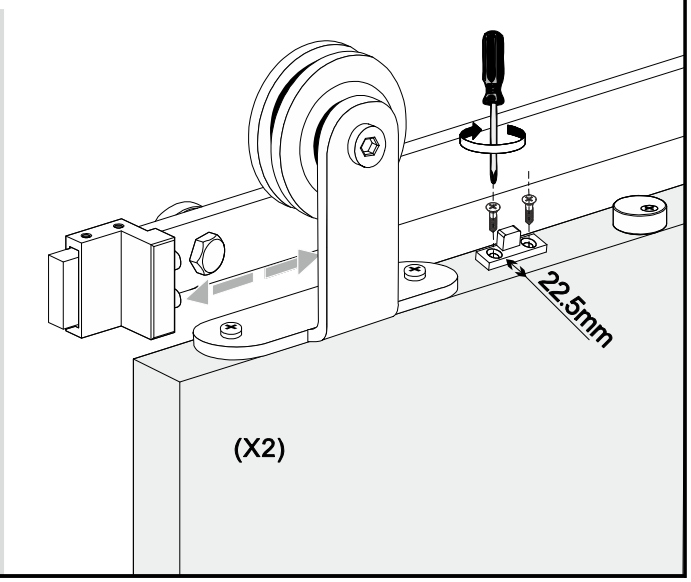
22.5mm
(X2)

7

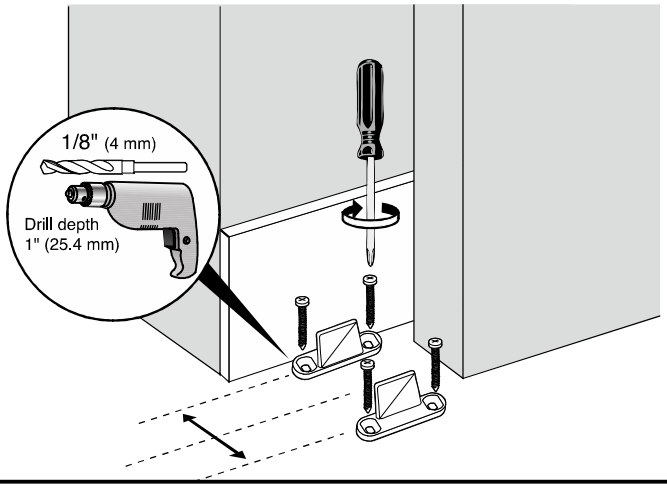
1/8" (4 mm)
Drill depth
1" (25.4 mm)

OR

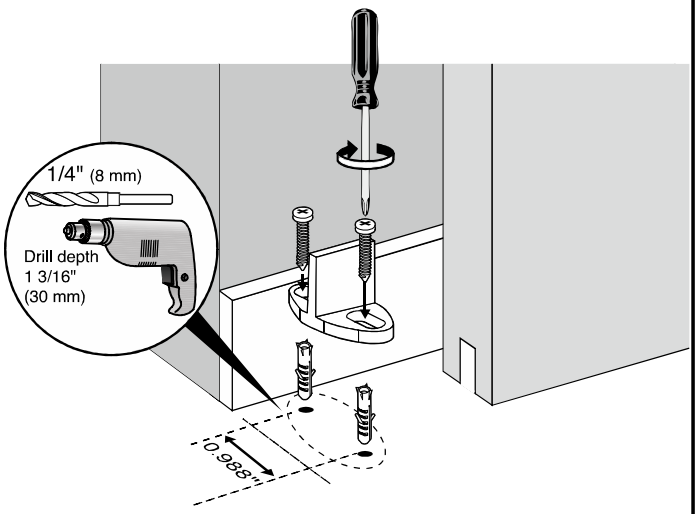
1/4" (8 mm)
Drill depth
1 3/16"
(30 mm)
0.938"